SF SUN FRAME

UNIRAC®
A HILTI GROUP COMPANY

SUNFRAME is a shared rail system with gap-free rows that boasts a sleek, low profile design. The superior aesthetics are valued by homeowners and architects for residential and light commercial applications.

UL2703 | SYSTEM FIRE CLASSIFICATION
CLASS A-TYPE 1,2 & 3 MODULES

ROOF MOUNT SYSTEMS

SUPERIOR ARRAY AESTHETICS

AESTHETIC DESIGN • AVAILABILITY • DESIGN TOOLS • QUALITY PROVIDER

SF SUN FRAME

UNIRAC®
A HILTI GROUP COMPANY

AESTHETIC DESIGN

MADE TO FIT YOUR ROOF

SUNFRAME is compatible with many attachment options, including Unirac made standoffs for installation on comp shingle or tile roofs. Modules are supported between SUNFRAME shared rails, not on top of them. This allows the array to install lower to the roof, enhancing its integrated appearance with gap-free rows and no protrusions visible from the side. Clear or dark finish components match module frames and visually blend the array seamlessly into your roof.

AVAILABILITY

NATIONWIDE NETWORK

Unirac maintains the largest network of stocking distributors for our racking solutions. Our partners have distinguished their level of customer support, availability, and overall value, thereby providing the highest level of service to users of Unirac products. Count on our partners for fast and accurate delivery to meet your project needs. Visit Unirac.com for a list of distributors.

AUTOMATED DESIGN TOOL

DESIGN PLATFORM AT YOUR SERVICE

Creating a bill of materials is just a few clicks away with U-Builder, a powerful online tool that streamlines the process of designing a code compliant solar mounting system. Save time by creating a user profile, and recall preferences and projects automatically when you log in. You will enjoy the ability to share projects with customers; there's no need to print results and send to a distributor, just click and share.

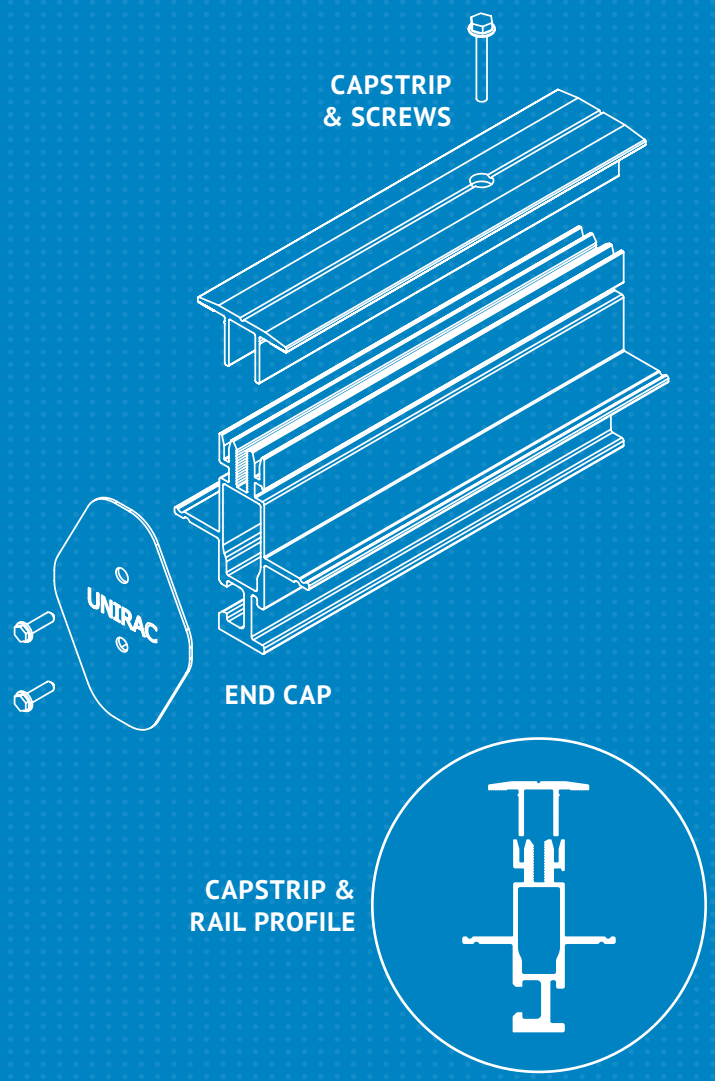

UNIRAC CUSTOMER SERVICE MEANS THE HIGHEST LEVEL OF PRODUCT SUPPORT

- UNMATCHED EXPERIENCE
- CERTIFIED QUALITY
- ENGINEERING EXCELLENCE
- BANKABLE WARRANTY
- DESIGN TOOLS
- PERMIT DOCUMENTATION

TECHNICAL SUPPORT

Unirac's technical support team is dedicated to answering questions & addressing issues in real time. An online library of documents including engineering reports, stamped letters and technical data sheets greatly simplifies your permitting and project planning process.

CERTIFIED QUALITY PROVIDER

Unirac is the only PV mounting vendor with ISO certifications for 9001:2008, 14001:2004 and OHSAS 18001:2007, which means we deliver the highest standards for fit, form, and function. These certifications demonstrate our excellence and commitment to first class business practices.

BANKABLE WARRANTY

As a Hilti Group Company, Unirac has the financial strength to back our products and reduce your risk. Have peace of mind knowing you are receiving products of exceptional quality. SUNFRAME is covered by a 10-year limited product warranty and a 5-year limited finish warranty

PROTECT YOUR REPUTATION WITH QUALITY RACKING SOLUTIONS BACKED BY ENGINEERING EXCELLENCE AND A SUPERIOR SUPPLY CHAIN

© PUB - 150101 - DIGITAL UPDATES